AUTO A4 - POS. A

(REV. A)

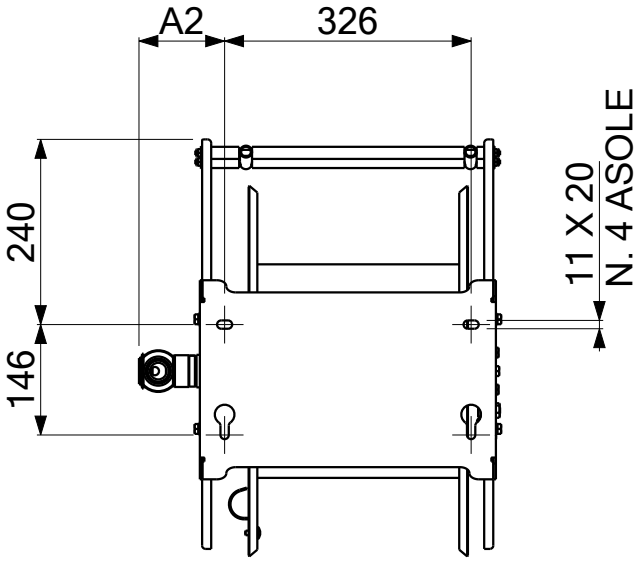

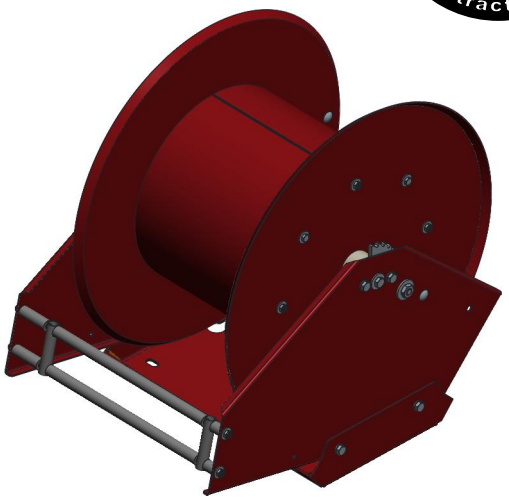

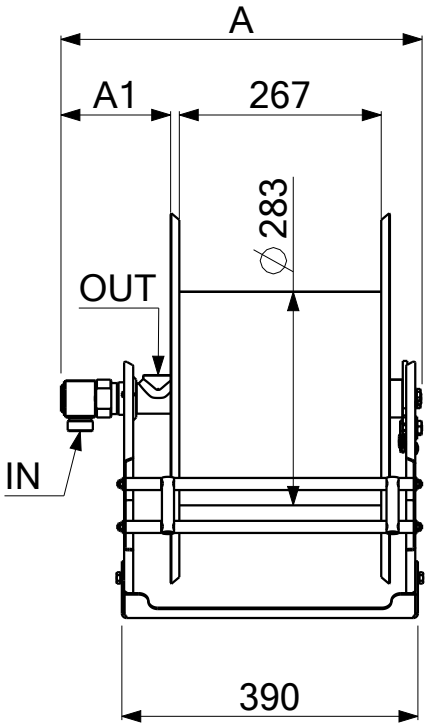

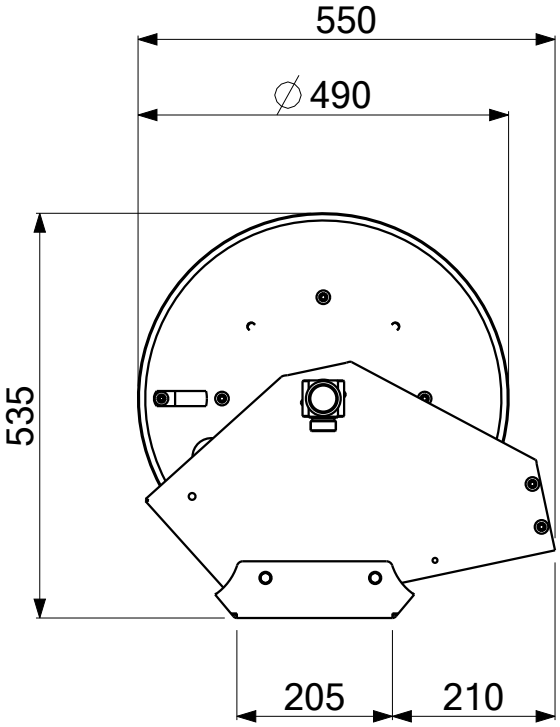

Codice *Code*	Lunghezza e diametro tubo consigliati *Recommended hose length and diameter*	Raccordi *Connection*		Pressione *Pressure*	Temperatura massima *Maximum temperature*	Dimensioni *Dimensions (mm)*			*Peso* *Weight*
		IN	OUT	bar	°C	A	A1	A2	kg
510.020.A	20m - ∅ 1" 25m - ∅ 3/4 / 5/8	M 1"	F 1"	200	120	480	145	115	26
510.035.A	30m - ∅ 3/4 45m - ∅ 5/8								34
510.045.A	50m - ∅ 1/2 / 3/8	M 1/2	F 1/2	250		455	120	90	
511.020.A	25m - ∅ 1" / 3/4	F 1"	F 1"	30	80	470	135	105	26
511.035.A	45m - ∅ 3/4	F 1"	F 1"						34
511.045.A	50m - ∅ 1/2 / 5/8	F 1/2	F 1/2	P. 4 20		445	110	80	

AUTO A4 - POS. B

(REV. A)

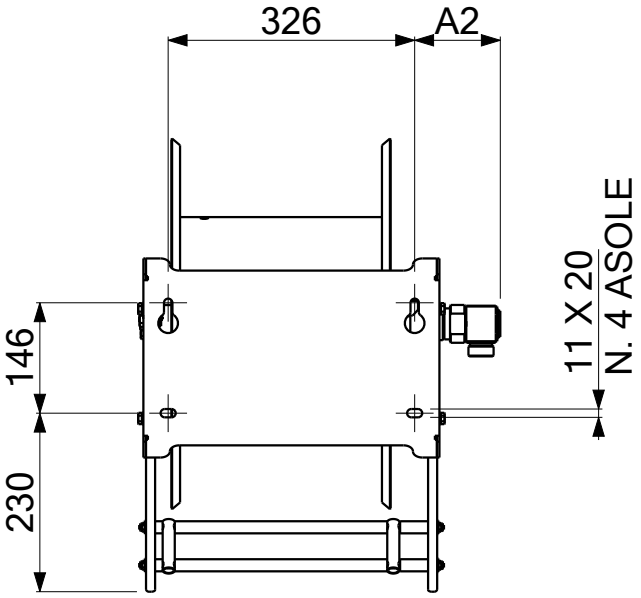

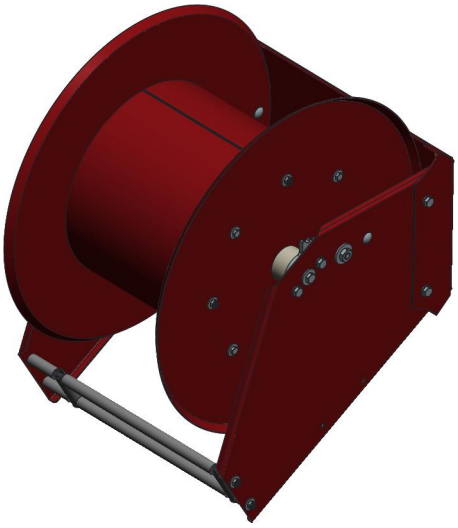

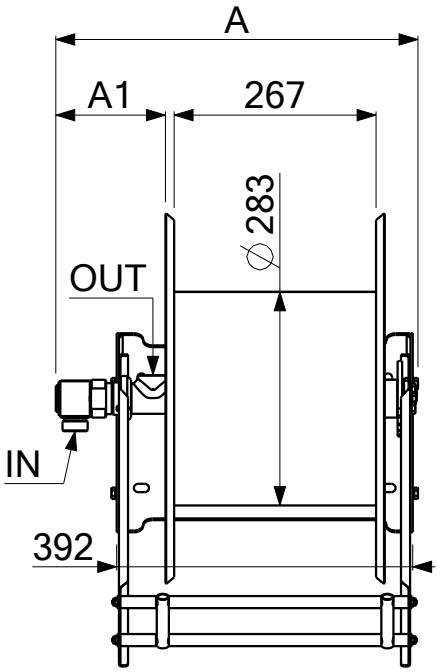

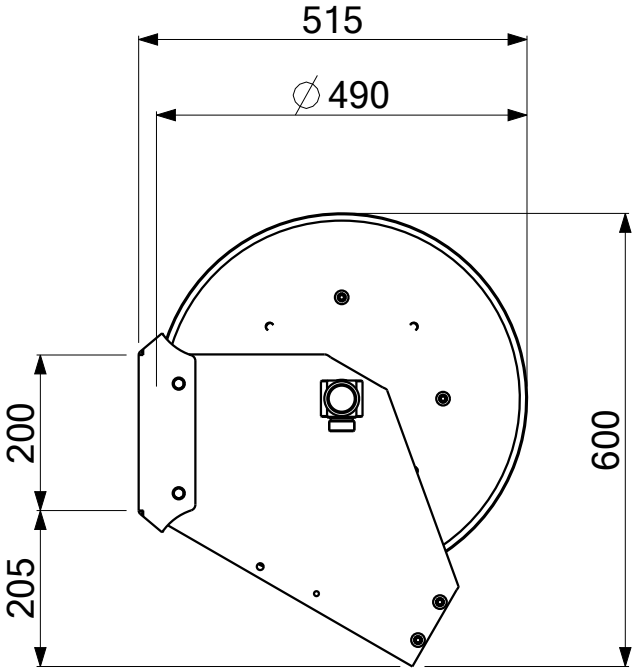

Codice *Code*	Lunghezza e diametro tubo consigliati *Recommended hose length and diameter*	Raccordi *Connection*		Pressione *Pressure*	Temperatura massima *Maximum temperature*	Dimensioni *Dimensions (mm)*			*Peso Weight*
		IN	OUT	bar	°C	A	A1	A2	kg
510.020.A	20m - ∅ 1" 25m - ∅ 3/4 / 5/8	M 1"	F 1"	200	120	480	145	115	26
510.035.A	30m - ∅ 3/4 45m - ∅ 5/8								34
510.045.A	50m - ∅ 1/2 / 3/8	M 1/2	F 1/2	250		455	120	90	
511.020.A	25m - ∅ 1" / 3/4	F 1"	F 1"	30	80	470	135	105	26
511.035.A	45m - ∅ 3/4	F 1"	F 1"						34
511.045.A	50m - ∅ 1/2 / 5/8	F 1/2	F 1/2	P. 5 20		445	110	80	